1

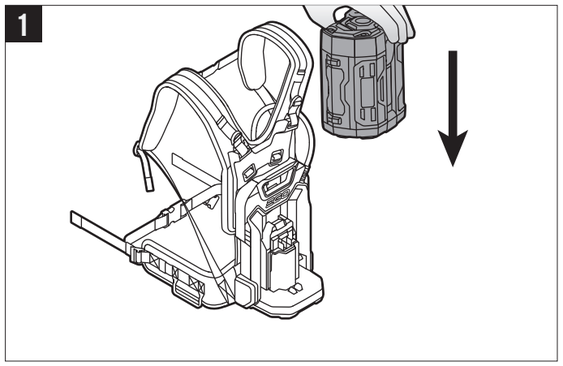

2

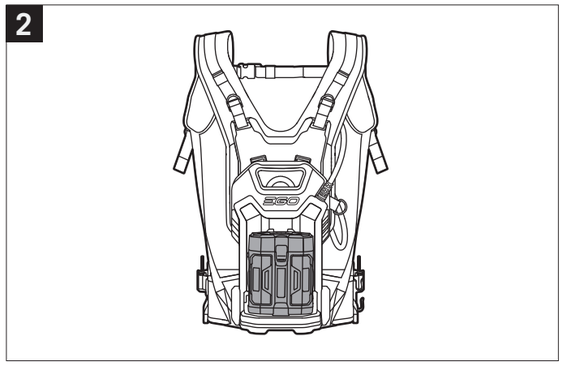

7-A

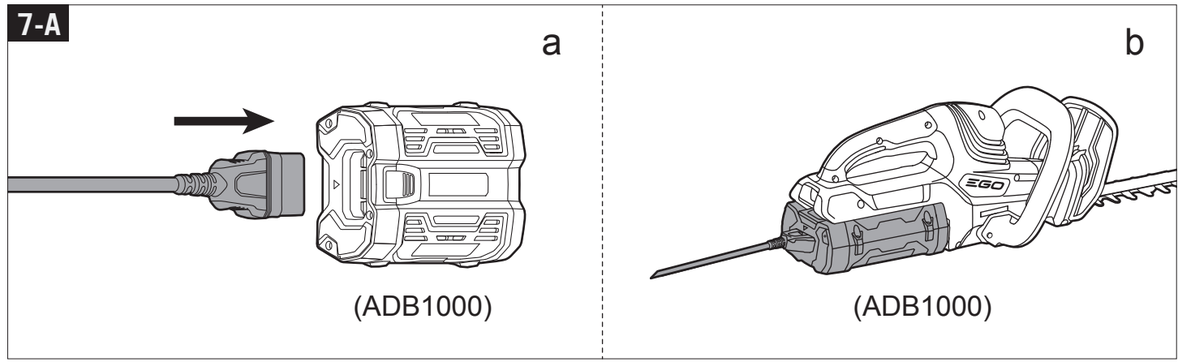

3

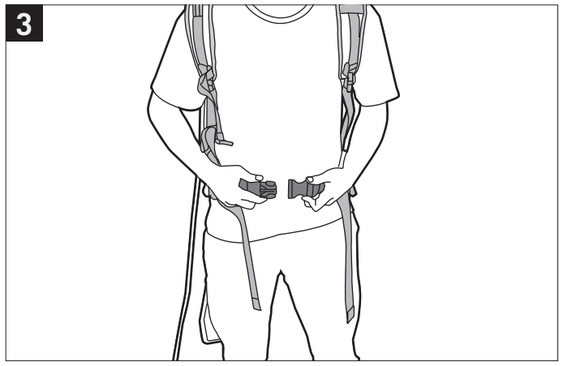

4

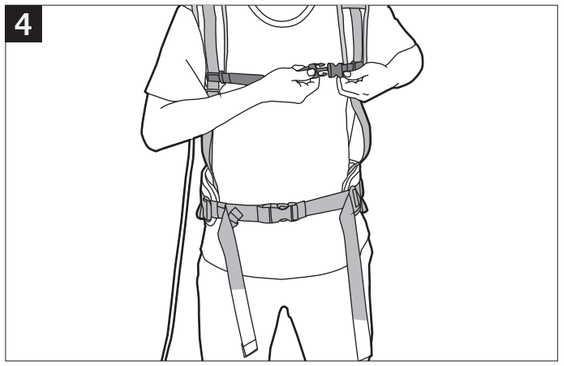

7-B

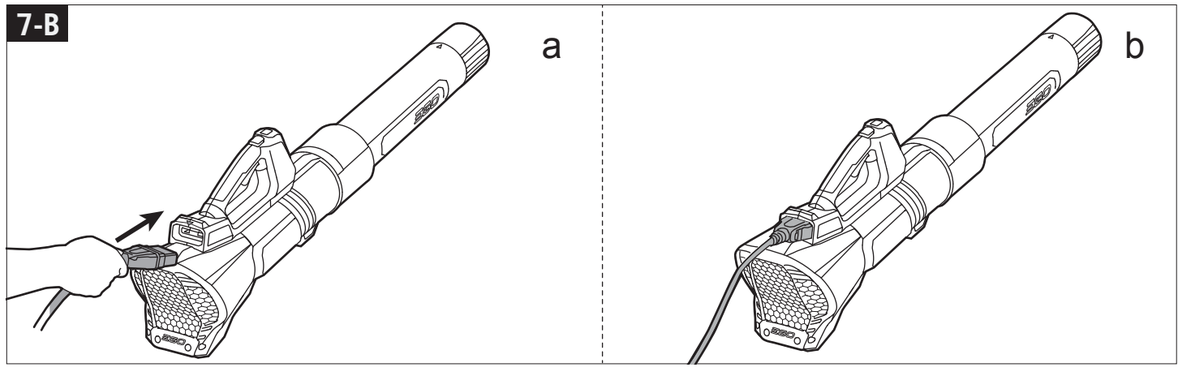

5

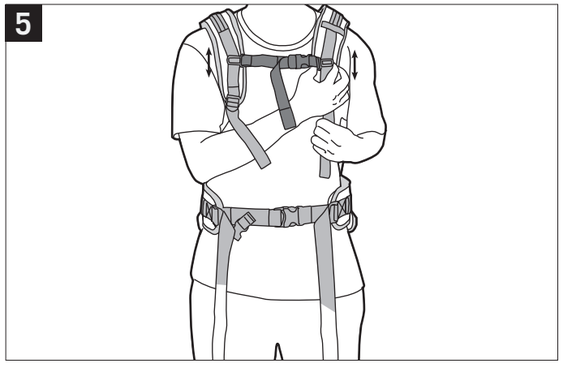

6

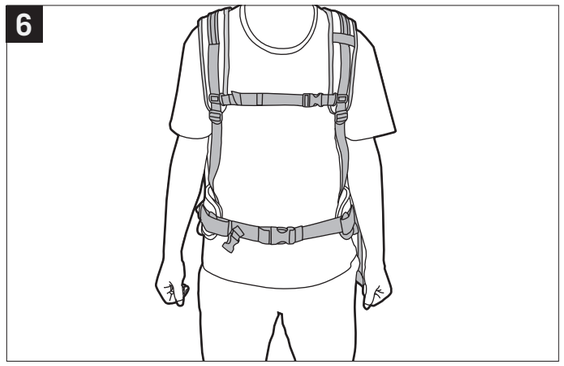

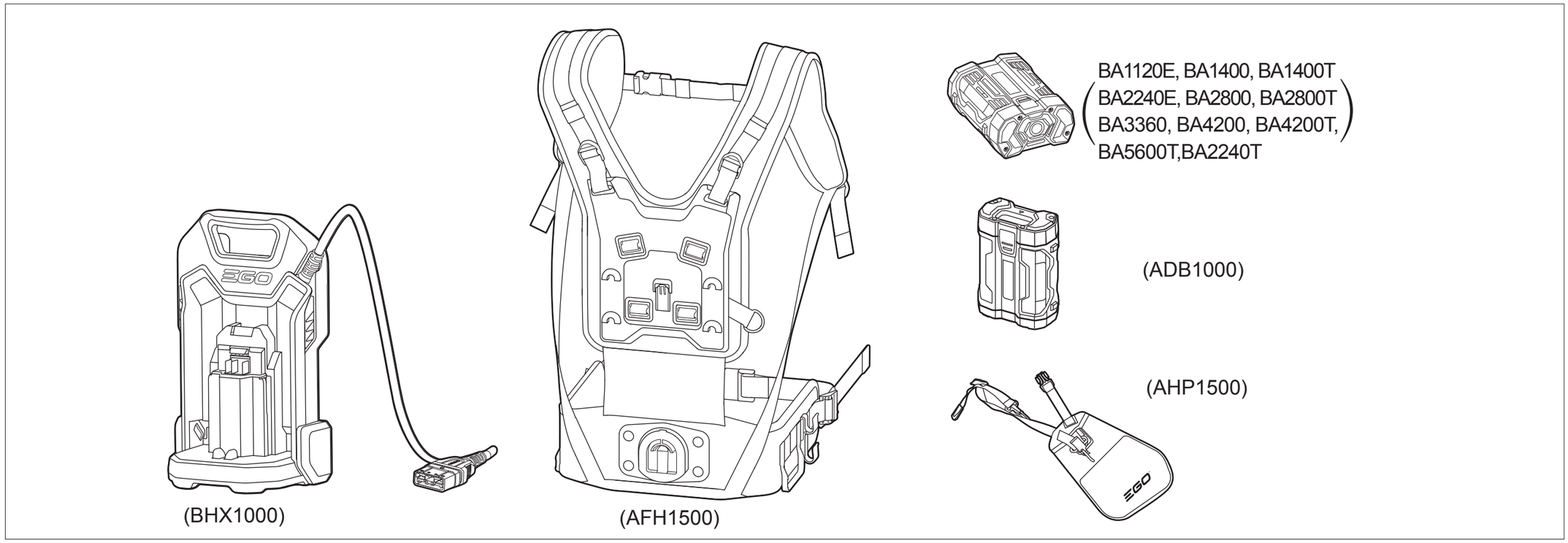
BA1120E, BA1400, BA1400T
BA2240E, BA2800, BA2800T
BA3360, BA4200, BA4200T,
BA5600T,BA2240T
(ADB1000)
(AHP1500)
(BHX1000)
(AFH1500)

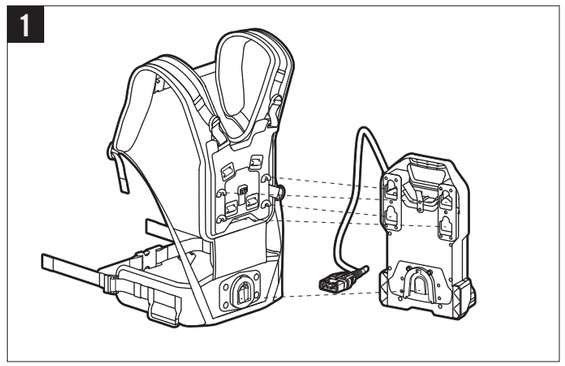
1

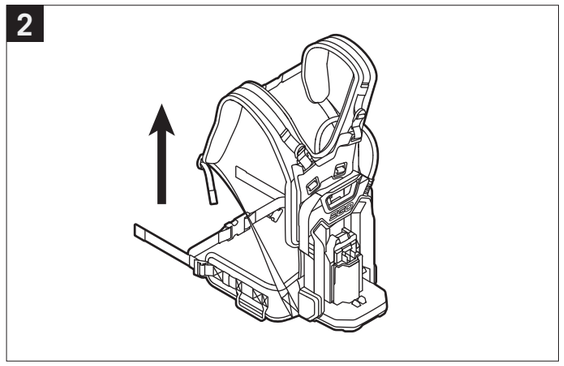
2

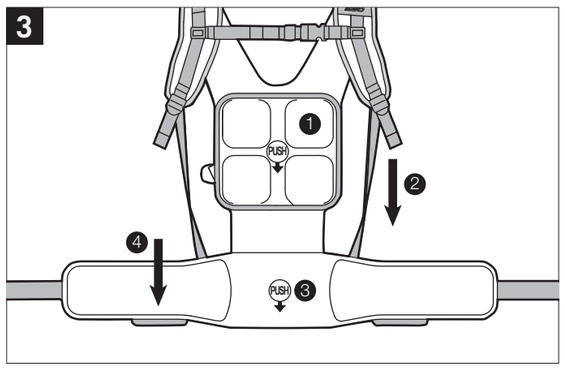
3
PUSH
PUSH

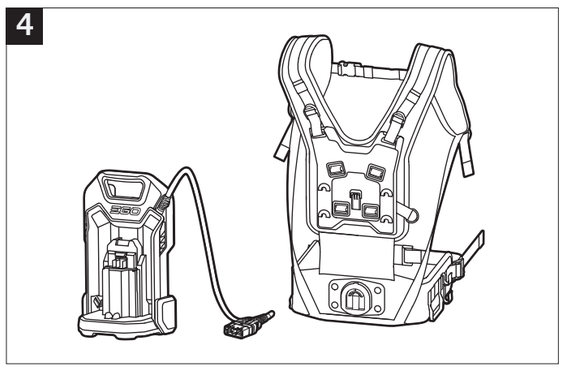
4